ITEM	PART NUMBER	DESCRIPTION
1	261-40X00X-XXX	CSUTD-D-1-XXX/ YYY-(CV1)
2	92-092 (QTY-2)	ADAPTER, 1” NPT x 1” ProPress

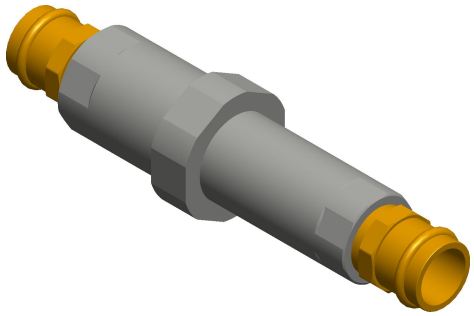

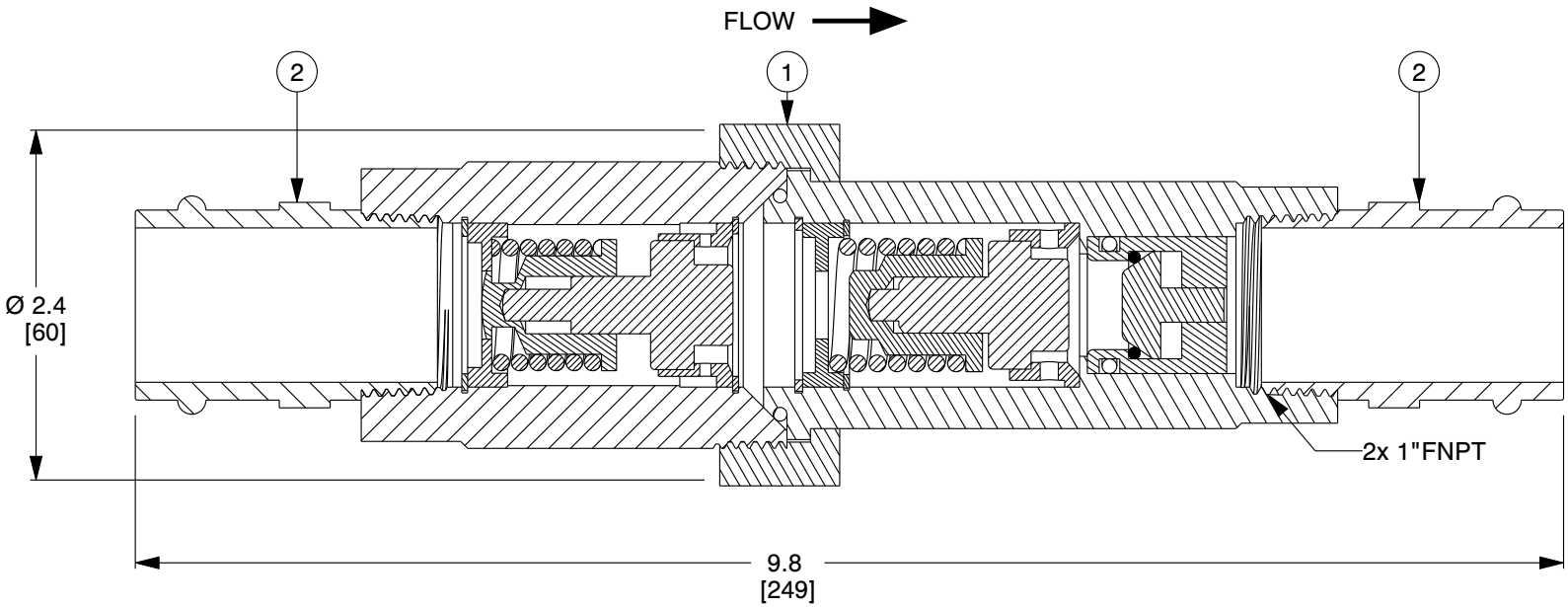

NOTES:

1. WEIGHT: 4.8 Lbs (2.2 Kg).
2. STANDARD BALANCING Cv: OPEN: 3.3, CLOSED: 0.2, DESIGN: 1.57.
3. THERMAL DISINFECTION BALANCING Cv: OPEN: 0.8, CLOSED: 0.2.
4. MAXIMUM WORKING PRESSURE: 200 PSIG (14 BAR).
5. MAXIMUM WORKING TEMPERATURE: 250°F (121°C).
6. XXX REFERS TO THE DESIRED CLOSING TEMPERATURE IN °F.
7. ALL COMPONENTS ARE NSF/ANSI 61 AND NSF 372 CERTIFIED FOR DOMESTIC WATER SYSTEMS.

COMPONENT	CircuitSolver Union Thermal Disinfection Dual Valve with Viega ProPress System

ThermOmegaTech

ThermOmegaTech, Inc.
353 Ivyland Road
Warminster, PA 18974-2205, USA
Ph: 215-798-5978

This file and any associated information and specifications are provided for reference and evaluation purposes only, and is subject to change without notice. ThermOmegaTech makes no representations, warranties or guarantees as to the appropriateness, accuracy, completeness, or suitability for any purpose, of the file, information or specifications. You are solely responsible for the use of the file, information or specifications.

This drawing is the property of ThermOmegaTech. It contains confidential, proprietary information that is ThermOmegaTech property. Do not disclose to or duplicate for others except as authorized by ThermOmegaTech.

SCALE	NTS

CSUTD-D-1-XXX-170-CV1-PP

1"-CSUTD-D-PP

UNIT
INCH [MM]
SHEET
1 of 1