ITEM	PART NUMBER	DESCRIPTION
1	258-20X100-XXX	1/2” CIRCUITSOLVER® THERMOSTATIC BALANCING VALVE WITH INTEGRATED UNION
2	92-160	BALL VALVE, 1/2” MxF, LF
3	92-206	BALL VALVE, 1/2” W/ SIDE DRAIN BV, WEBSTONE, LF BRASS
4	92-162	1/2” X CL NIPPLE BRASS LF

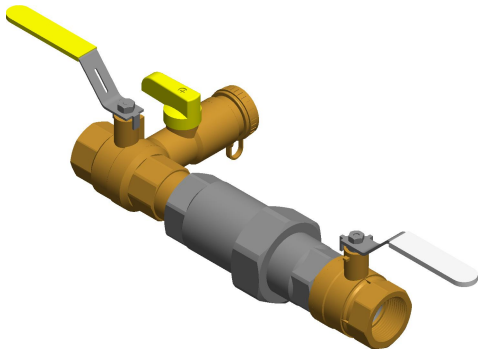

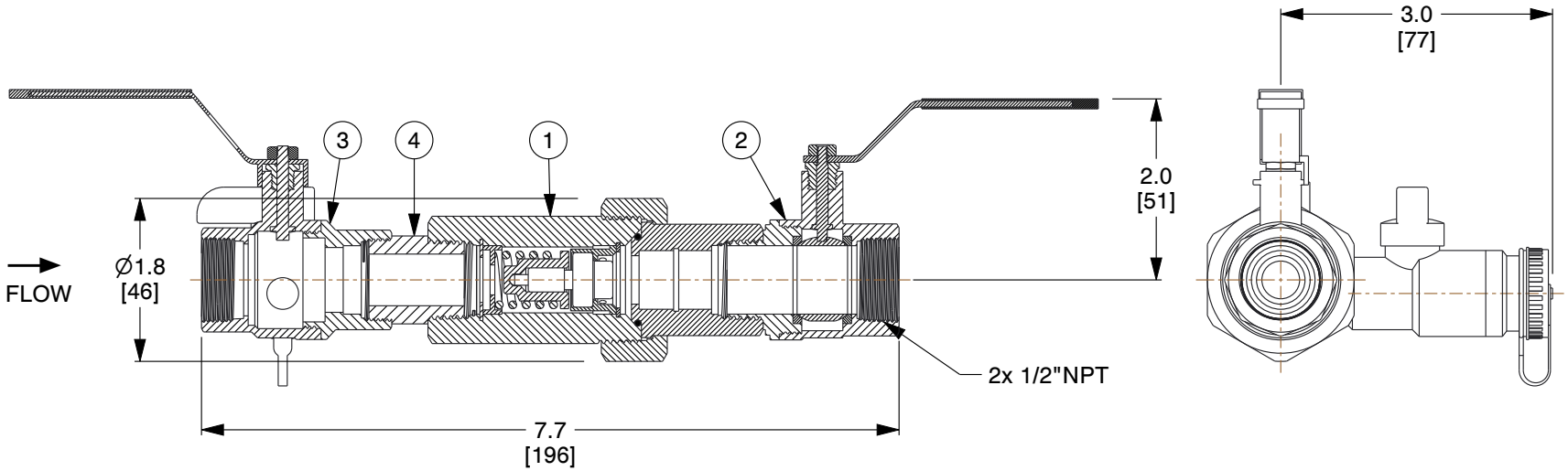

NOTES:
1. WEIGHT: 2.5 Lbs (1.2 Kg).
2. Cv: OPEN: 1.3, CLOSED: 0.2, DESIGN: 0.60.
3. MAXIMUM WORKING PRESSURE: 200 PSIG (14 BAR).
4. MAXIMUM WORKING TEMPERATURE: 250°F (121°C).
5. XXX REFERS TO THE DESIRED CLOSING TEMPERATURE.
6. ALL COMPONENTS ARE NSF/ANSI/CAN 61 OR 372 CERTIFIED.

COMPONENT	CircuitSolver Union Assembly (CSUA) and Webstone Drain Valve

ThermOmegaTech
ThermOmegaTech, Inc.
353 Ivyland Road
Warminster, PA 18974-2205, USA
Ph: 215-798-5978

This file and any associated information and specifications are provided for reference and evaluation purposes only, and is subject to change without notice. ThermOmegaTech makes no representations, warranties or guarantees as to the appropriateness, accuracy, completeness, or suitability for any purpose, of the file, information or specifications. You are solely responsible for the use of the file, information or specifications.

This drawing is the property of ThermOmegaTech. It contains confidential, proprietary information that is ThermOmegaTech property. Do not disclose to or duplicate for others except as authorized by ThermOmegaTech.

SCALE: NTS

CSUA-1/2-XXX-WDV

1/2" - CSUA AND WEBSTONE DRAIN VALVE

UNIT: INCH [MM]

SHEET: 1 of 1