ITEM	PART NUMBER	DESCRIPTION
1	258-20X100-XXX	1/2" CIRCUITSOLVER THERMOSTATIC BALANCING VALVE WITH INTEGRATED UNION
2	92-116 (QTY-2)	ADAPTER, 1/2" NPT x 1/2" ProPEX

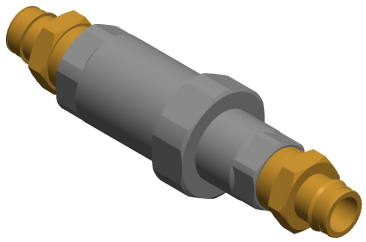

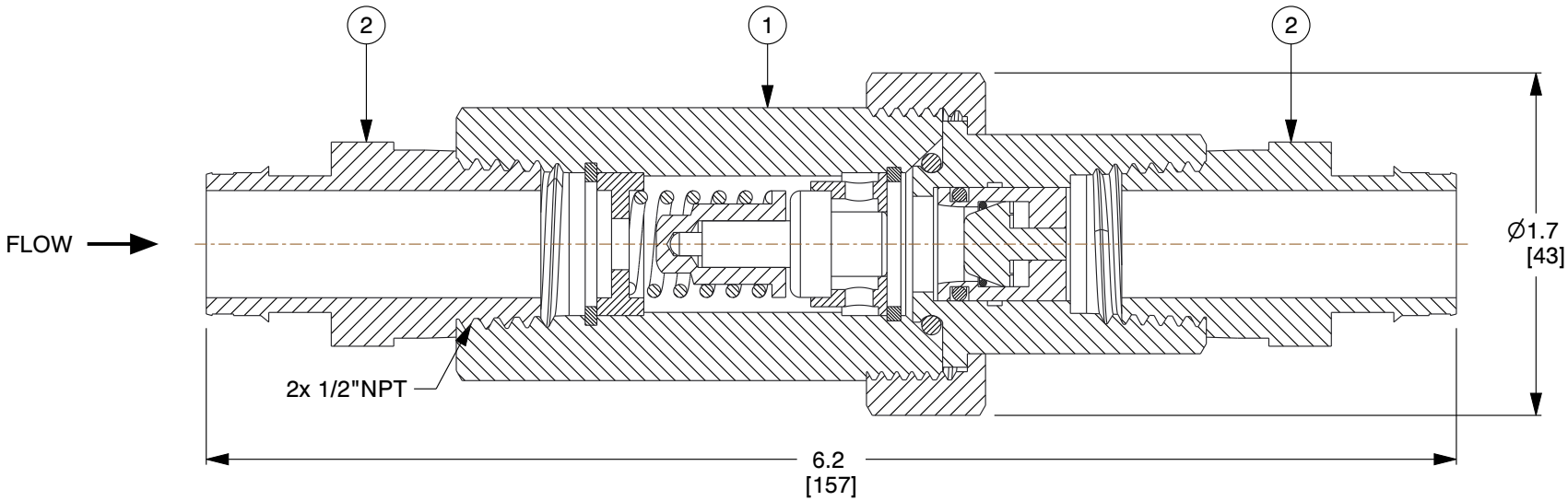

NOTES:
1. WEIGHT: 1.5 Lbs (0.7 Kg).
2. Cv: OPEN: 1.3, CLOSED: 0.2, DESIGN: 0.60.
3. MAXIMUM WORKING PRESSURE: 200 PSIG (14 BAR).
4. MAXIMUM WORKING TEMPERATURE: 250°F (121°C).
5. XXX REFERS TO THE DESIRED CLOSING TEMPERATURE.
6. ALL COMPONENTS ARE NSF/ANSI/CAN 61 OR 372 CERTIFIED.

COMPONENT	CircuitSolver Union and Uponor ProPEX Adapters (CSU-PX)

ThermOmegaTech
ThermOmegaTech, Inc.
353 Ivyland Road
Warminster, PA 18974-2205, USA
Ph: 215-798-5978

This file and any associated information and specifications are provided for reference and evaluation purposes only, and is subject to change without notice. ThermOmegaTech makes no representations, warranties or guarantees as to the appropriateness, accuracy, completeness, or suitability for any purpose, of the file, information or specifications. You are solely responsible for the use of the file, information or specifications.

This drawing is the property of ThermOmegaTech. It contains confidential, proprietary information that is ThermOmegaTech property. Do not disclose to or duplicate for others except as authorized by ThermOmegaTech.

SCALE	NTS

CSU-1/2-XXX-CV1-PX

1/2" - CIRCUITSOLVER UNION AND UPONOR ProPEX ADAPTERS (CSU-PX)

UNIT
INCH [MM]
SHEET
1 of 1