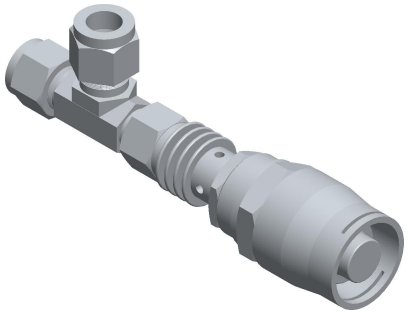

ITEM	DESCRIPTION	MATERIAL
1	THERMAL ACTUATOR	300 Series SS
2	BUSHING SEALS	See Note 7
3	BUSHING - 3/4" NPT	300 Series SS
4	ADAPTER	300 Series SS
5	LOCKNUT	300 Series SS
6	OPERATING SPRING	300 Series SS
7	YOKE	300 Series SS
8	PLUG/STEM ASSEMBLY	300 Series SS
9	STEM SEAL	PTFE
10	SEAT SEAL	PTFE
11	VALVE BODY	300 Series SS
12	OPTIONAL BAND-O-LET FITTING	300 Series SS

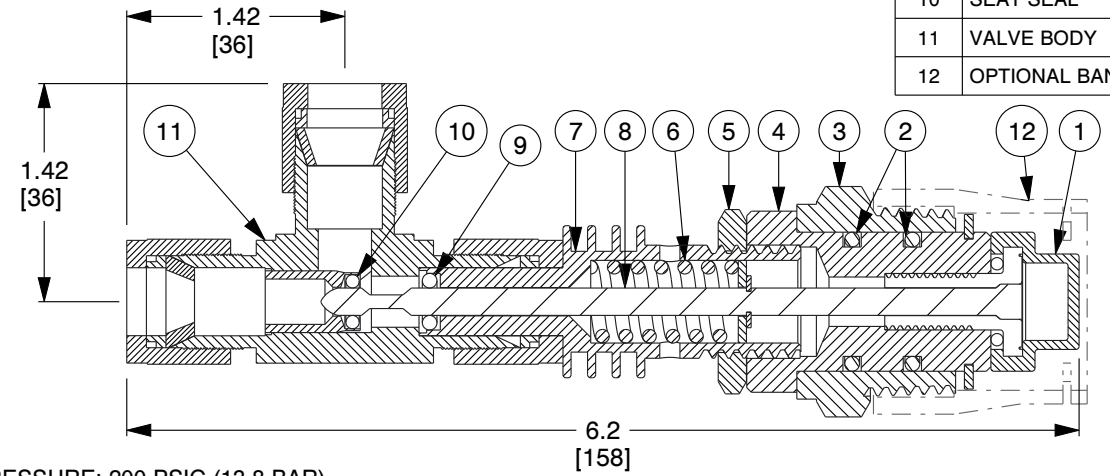

NOTES:

1. TUBE O.D SIZE: 1/2.
2. Cv: 0.9.
3. WEIGHT: 0.6 Lb (0.27 Kg).
4. MAXIMUM OPERATING PRESSURE: 200 PSIG (13.8 BAR).
5. FULL OPEN TEMPERATURES “XXX” AVAILABLE:
   A. XR SERIES: 040°F, 045°F, 050°F, 060°F, 070°F, 075°F, 085°F, 095°F, 100°F, 105°F, 110°F, 115°F, 120°F, 125°F, 130°F, 140°F, 150°F, 160°F, 170°F, 175°F, 180°F, 190°F, 200°F AND 210°F.
   B. CLOSING TEMPERATURE IS 10°F BELOW OPENING TEMPERATURE FOR REVERSE ACTING VALVES. CONSULT FACTORY FOR SPECIAL HIGHER OR LOWER SETTINGS.
6. BAND-O-LET FITTING OPTIONAL (HOSE CLAMP NOT INCLUDED), FOR SENSING PIPE OD TEMPERATURES.
7. VITON IS STANDARD, OTHERS ARE AVAILABLE.
8. 0 = PARKER FITTINGS ARE STANDARD. 1 = SWAGELOK FITTINGS ARE AVAILABLE.
9. A #20 MESH STRAINER IS RECOMMENDED.

COMPONENT	TEMPERATURE CONTROL VALVE

ThermOmegaTech

ThermOmegaTech, Inc.
353 Ivyland Road
Warminster, PA 18974-2205, USA
Ph: 215-798-5978

This file and any associated information and specifications are provided for reference and evaluation purposes only, and is subject to change without notice. ThermOmegaTech makes no representations, warranties or guarantees as to the appropriateness, accuracy, completeness, or suitability for any purpose, of the file, information or specifications. You are solely responsible for the use of the file, information or specifications.

This drawing is the property of ThermOmegaTech. It contains confidential, proprietary information that is ThermOmegaTech property. Do not disclose to or duplicate for others except as authorized by ThermOmegaTech.

SCALE	NTS

794-0X0000-XXX

1/2" TV/US-XR

UNIT
INCH [MM]
SHEET
1 of 1