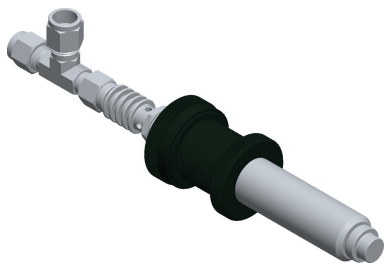

ITEM	DESCRIPTION	MATERIAL
1	THERMAL ACTUATOR	300 Series SS
2	THERMAL ISOLATION EXTENSION	300 Series SS
3	VALVE MOUNTING BULKHEAD FITTING	Acetal Copolymer
4	CALIBRATION LOCKNUT	300 Series SS
5	YOKE	300 Series SS
6	TEE BODY	300 Series SS
7	TUBING COMPRESSION NUT	300 Series SS

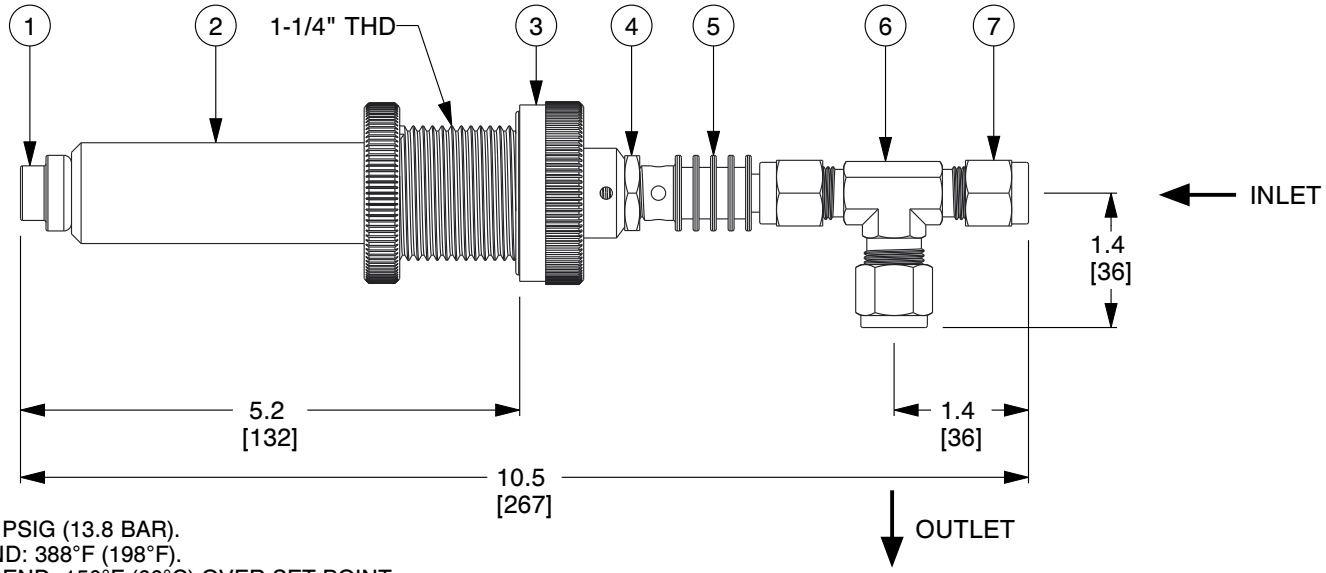

NOTES:

1. TUBE O.D. SIZE: 1/2".
2. Cv: 0.9.
3. WEIGHT: 1.2 Lb (0.6 Kg).
4. MAXIMUM OPERATING PRESSURE: 200 PSIG (13.8 BAR).
5. MAXIMUM TEMPERATURE AT VALVE END: 388°F (198°F).
6. MAXIMUM TEMPERATURE AT SENSING END: 150°F (66°C) OVER SET-POINT LIMIT 300°F (149°C).
7. FULL OPEN TEMPERATURES "XXX" AVAILABLE:
   A. I SERIES: 035°F, 040°F, 050°F, 055°F, 060°F, 065°F, 075°F, 085°F, 090°F 095°F, 100°F, 105°F, 110°F,120°F, 125°F, 130°F, 140°F, 150°F, 155°F, 160°F, 170°F, 180°F, 190°F AND 200°F.
   B. CLOSING TEMPERATURE IS TYPICALLY 10°F ABOVE OPENING TEMPERATURE FOR DIRECT ACTING VALVES AND 10°F BELOW OPENING TEMPERATURE FOR REVERSE ACTING VALVES.
8. 0 = PARKER FITTINGS ARE STANDARD. 1 = SWAGELOK FITTINGS ARE AVAILABLE.
9. A #20 MESH STRAINER IS RECOMMENDED.

COMPONENT	INSTRUMENT ENCLOSURE TEMPERATURE CONTROL

ThermOmegaTech

ThermOmegaTech, Inc.
353 Ivyland Road
Warminster, PA 18974-2205, USA
Ph: 215-798-5978

This file and any associated information and specifications are provided for reference and evaluation purposes only, and is subject to change without notice. ThermOmegaTech makes no representations, warranties or guarantees as to the appropriateness, accuracy, completeness, or suitability for any purpose, of the file, information or specifications. You are solely responsible for the use of the file, information or specifications.

This drawing is the property of ThermOmegaTech. It contains confidential, proprietary information that is ThermOmegaTech property. Do not disclose to or duplicate for others except as authorized by ThermOmegaTech.

SCALE	NTS

734-0X1000-XXX

1/2" TV/SC-I-S-SS

UNIT	INCH [MM]
SHEET	1 of 1